Standard configuration is with 4mm frame

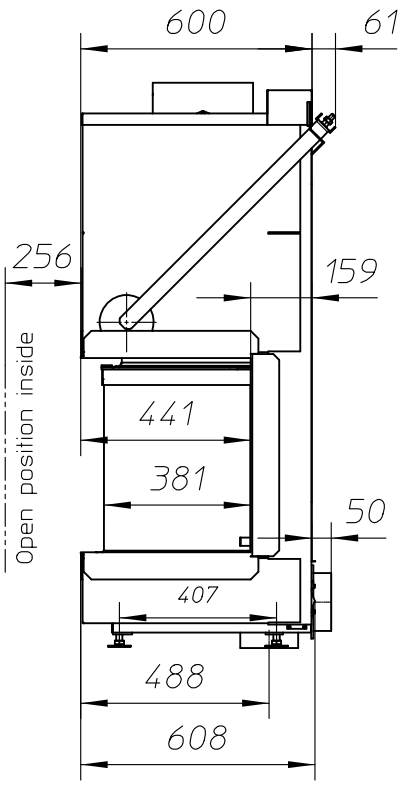

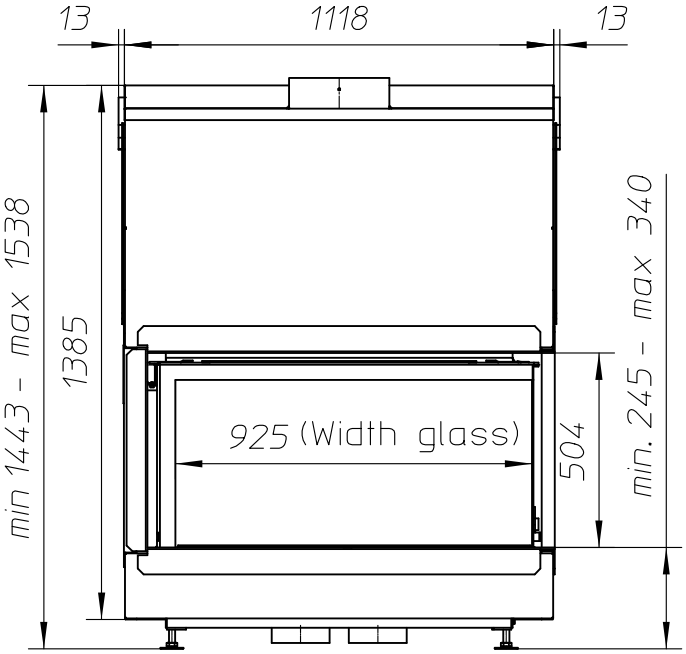

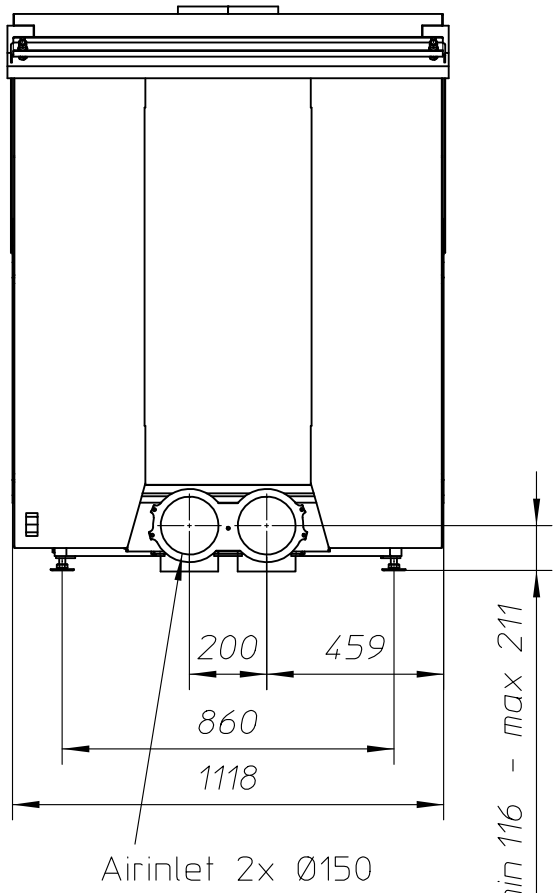

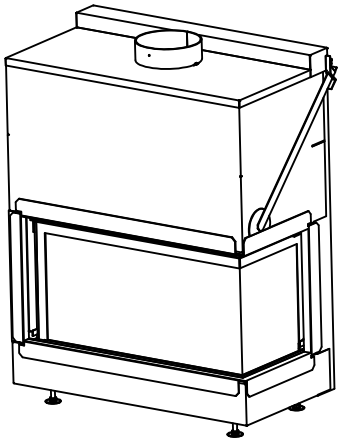

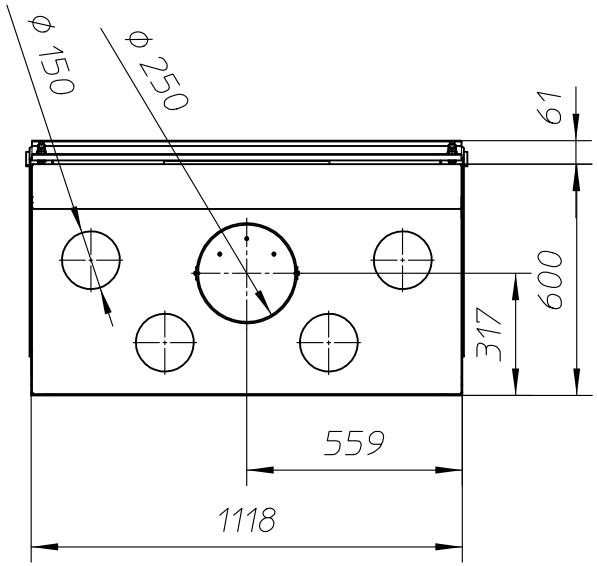

ULTIME D Patented

metalfire

Technical Document

ULTIME D MF 1050-50 WHE 2SR V20

Dimensions (mm)

- combustion opening WxHxD:	1056x441x504
- external WxDxH:	1118x600x1443
- fresh air:	2xØ150
- diameter flue:	Ø250

Technical Data

- Ecolabel:	A+
- capacity:	19kW
- efficiency capacity:	84%
- CO (volume with 13%02):	0.072%
- dust (volume with 13%02):	29,5mg/Nm^3
- weight:	320kg

- Air intake to convection: minimum 720cm^2(4xø150)
- Air exhaust to convection: minimum 720cm^2(4xø150)

Specifications

- inside finishing: heat-resistant black paint
- vermiculite insulation plates
- convection jacket in galvanized steel
- back and sides: ribbed cast iron
- interior finishing: ORIGINAL (ribbed cast iron)

Options

- Finishing frame

Table: prescribed insulation thickness (mm)

Combustable finishing material	A	B	C	D
Test report (TC = 0,14 W/mK)	25	25	25	25
Non-combustable finishing material				
non-combustable materials (structural building items EXCLUDED e.g. load bearing walls)	0	0	0	0

TC = thermal conductivity NC = non-combustable

First aid and technical support:
- support@metalfire.eu
- +32 (0)9 261 50 57

scale 1:20 | Rev. -

www.metalfire.eu EN 13229 | CE

General dimensional tolerances up to 6mm
Metalfire preserves the right to modify specifications without previous notice

WITHOUT FINISHING FRAME

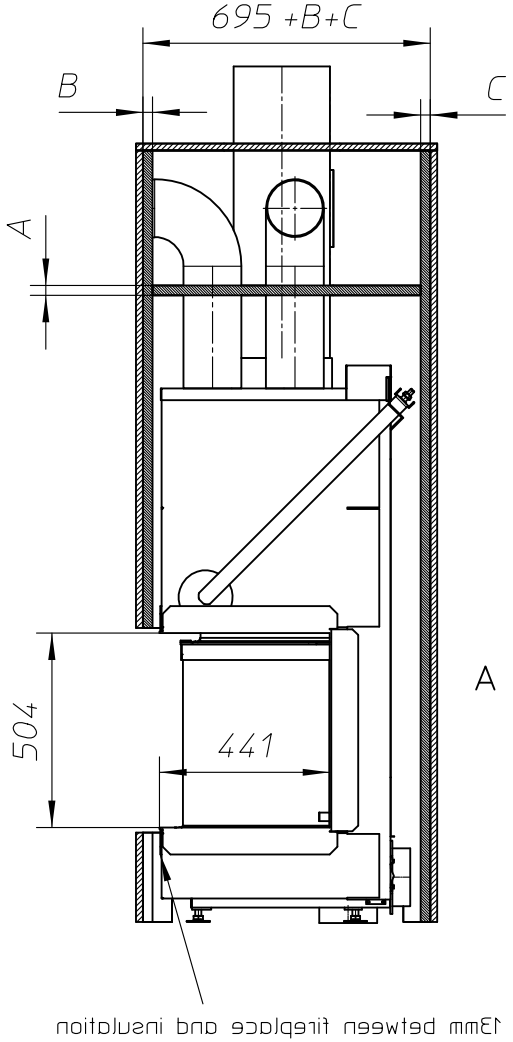

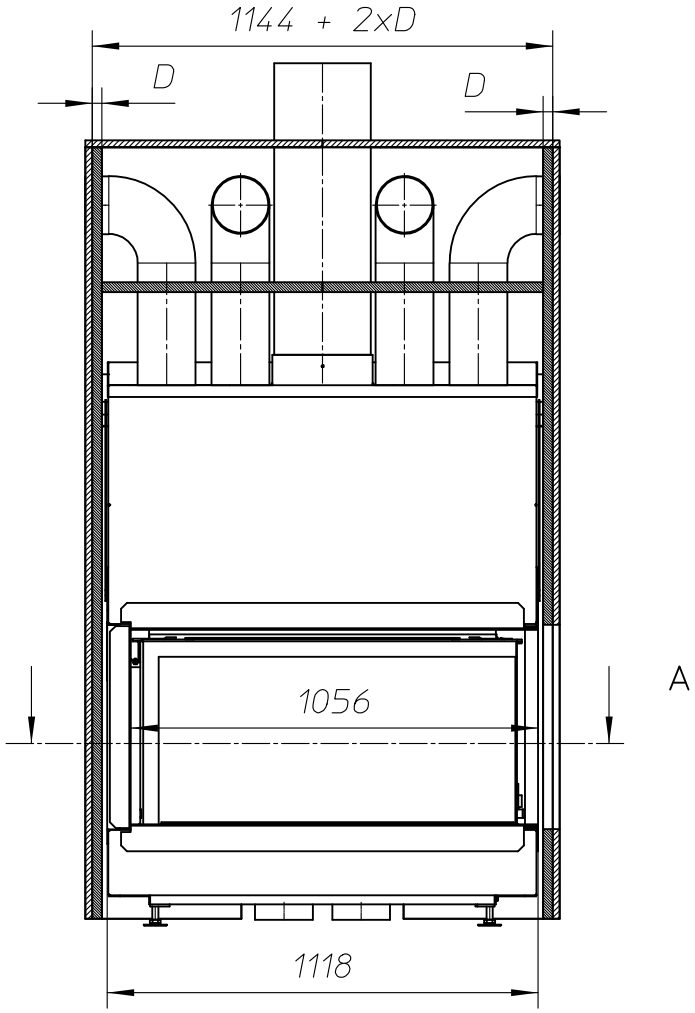

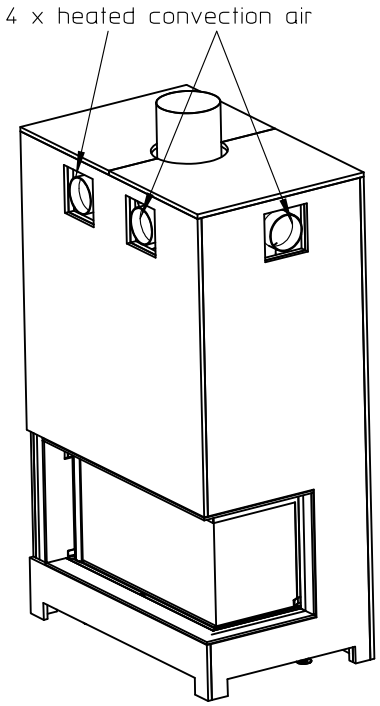

Scale 1:30

Combustable finishing material

Insulation

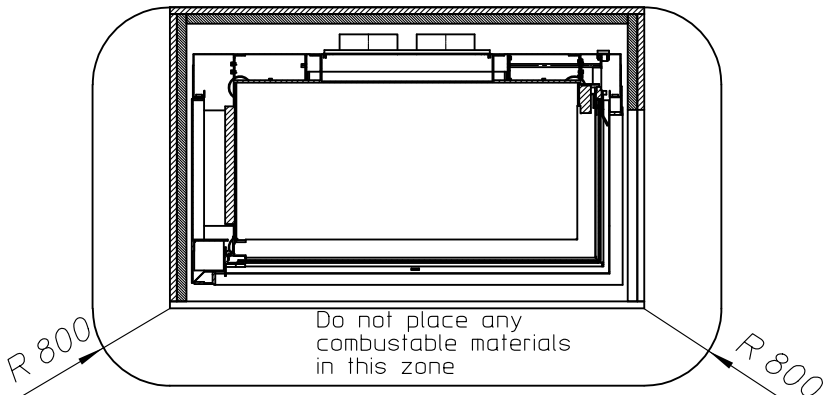

SECTION A-A

ULTIME D Patented

metalfire

Technical Document

ULTIME D MF 1050-50 WHE 2SR V20

Dimensions (mm)

- combustion opening WxHxD: 1056x441x504
- external WxDxH: 1118x600x1443
- fresh air: 2xø150
- diameter flue: ø250

Technical Data

- Ecolabel: A+
- capacity: 19kW
- efficiency capacity: 84%
- CO (volume with 13%02): 0.072%
- dust (volume with 13%02): 29,5mg/Nm^3
- weight: 320kg
- Air intake to convection: minimum 720cm^2(4xø150)
- Air exhaust to convection: minimum 720cm^2(4xø150)

Specifications

- inside finishing: heat-resistant black paint
- vermiculite insulation plates
- convection jacket in galvanized steel
- back and sides: ribbed cast iron
- interior finishing: ORIGINAL (ribbed cast iron)

Options

- Finishing frame

Table: prescribed insulation thickness (mm)

Combustable finishing material

	A	B	C	D
* Test report (TC = 0,14 W/mK)	25	25	25	25

Non-combustable finishing material

non-combustable materials (structural building items EXCLUDED e.g. load bearing walls)	0	0	0	0

TC = thermal conductivity NC = non-combustable

First aid and technical support:
- support@metalfire.eu
- +32 (0)9 261 50 57

scale 1:20 | Rev. -

www.metalfire.eu EN 13229 | CE

General dimensional tolerances up to 6mm
Metalfire preserves the right to modify specifications without previous notice

WITH FINISHING FRAME 90/10

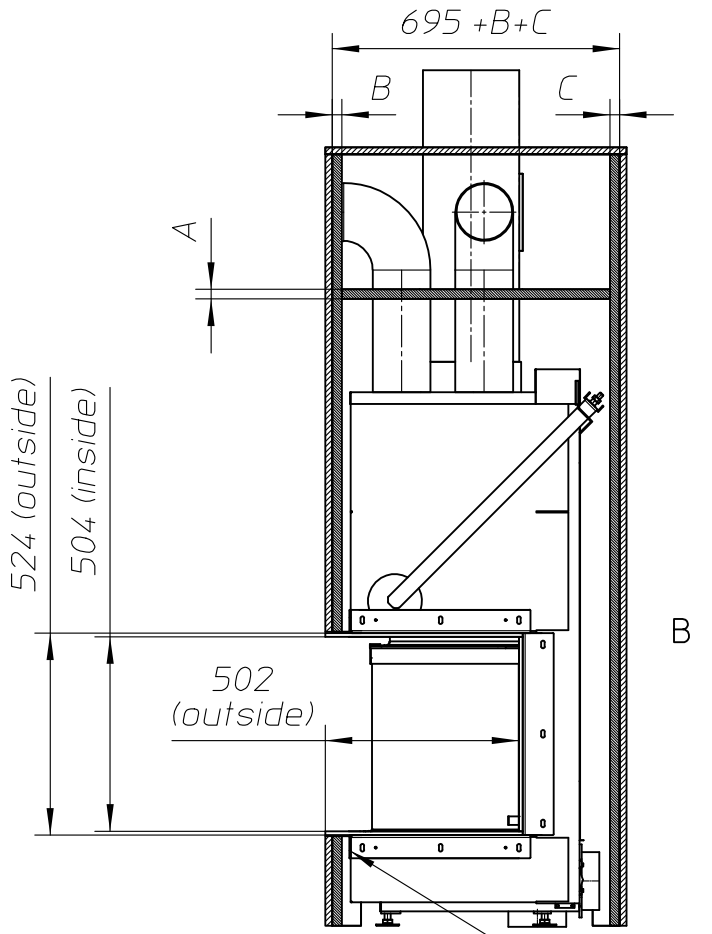

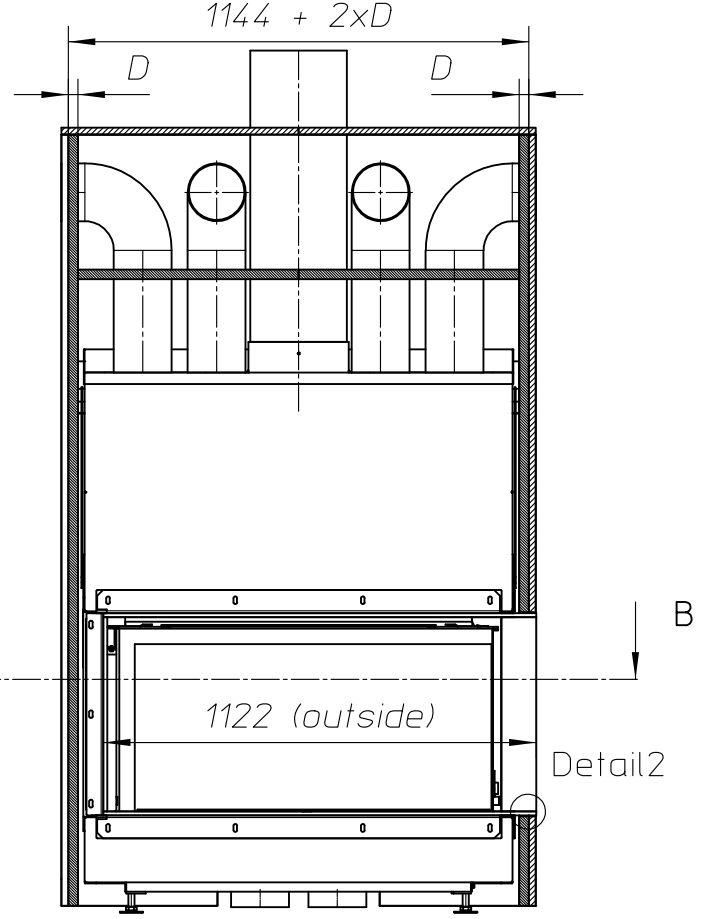

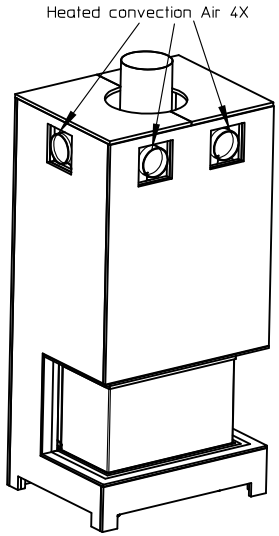

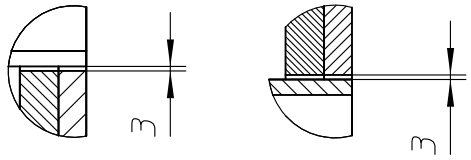

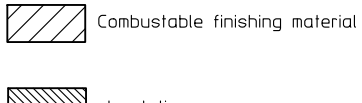

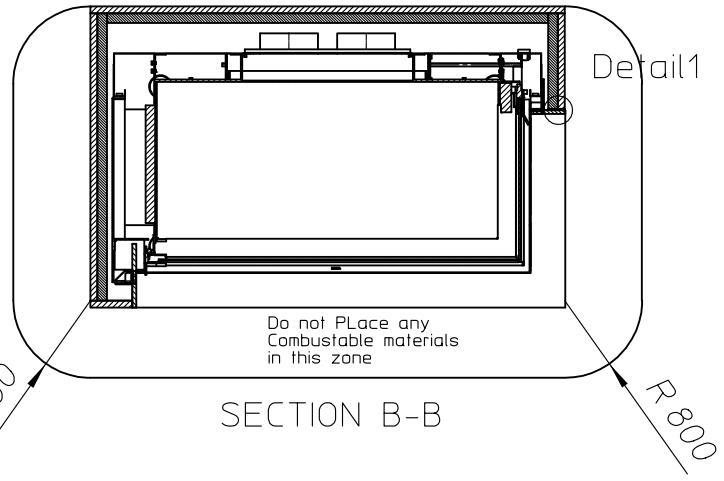

ULTIME D Patented

metalfire

Technical Document

ULTIME D MF 1050-50 WHE 2SR V20

Dimensions (mm)

- combustion opening WxHxD:	1056x441x504
- external WxDxH:	1118x600x1443
- fresh air:	2xØ150
- diameter flue:	Ø250

Technical Data

- Ecolabel:	A+
- capacity:	19kW
- efficiency capacity:	84%
- CO (volume with 13%02):	0.072%
- dust (volume with 13%02):	29,5mg/Nm^3
- weight:	320kg

- Air intake to convection: minimum 720cm^2(4xø150)
- Air exhaust to convection: minimum 720cm^2(4xø150)

Specifications

- inside finishing: heat-resistant black paint
- vermiculite insulation plates
- convection jacket in galvanized steel
- back and sides: ribbed cast iron
- interior finishing: ORIGINAL (ribbed cast iron)

Options

- Finishing frame

Table: prescribed insulation thickness (mm)

Combustable finishing material	A	B	C	D
Test report (TC = 0,14 W/mK)	25	25	25	25
Non-combustable finishing material				
non-combustable materials (structural building items EXCLUDED e.g. load bearing walls)	0	0	0	0

TC = thermal conductivity NC = non-combustable

First aid and technical support:
- support@metalfire.eu
- +32 (0)9 261 50 57

scale 1:20 | Rev. -

www.metalfire.eu EN 13229 CE

General dimensional tolerances up to 6mm
Metalfire preserves the right to modify specifications without previous notice